A & M Electric Tools

Ind	Product No.	Type	Voltage	Country
a	4000403636	CS55	220-230V	IN2

Ind	Product No.	Type	Voltage	Country

Circular Saws

Milwaukee

CS 55

Exp.view No.	Version	Date	Page
4926 4036 39	**0002**	**26.09.07**	**1/1**

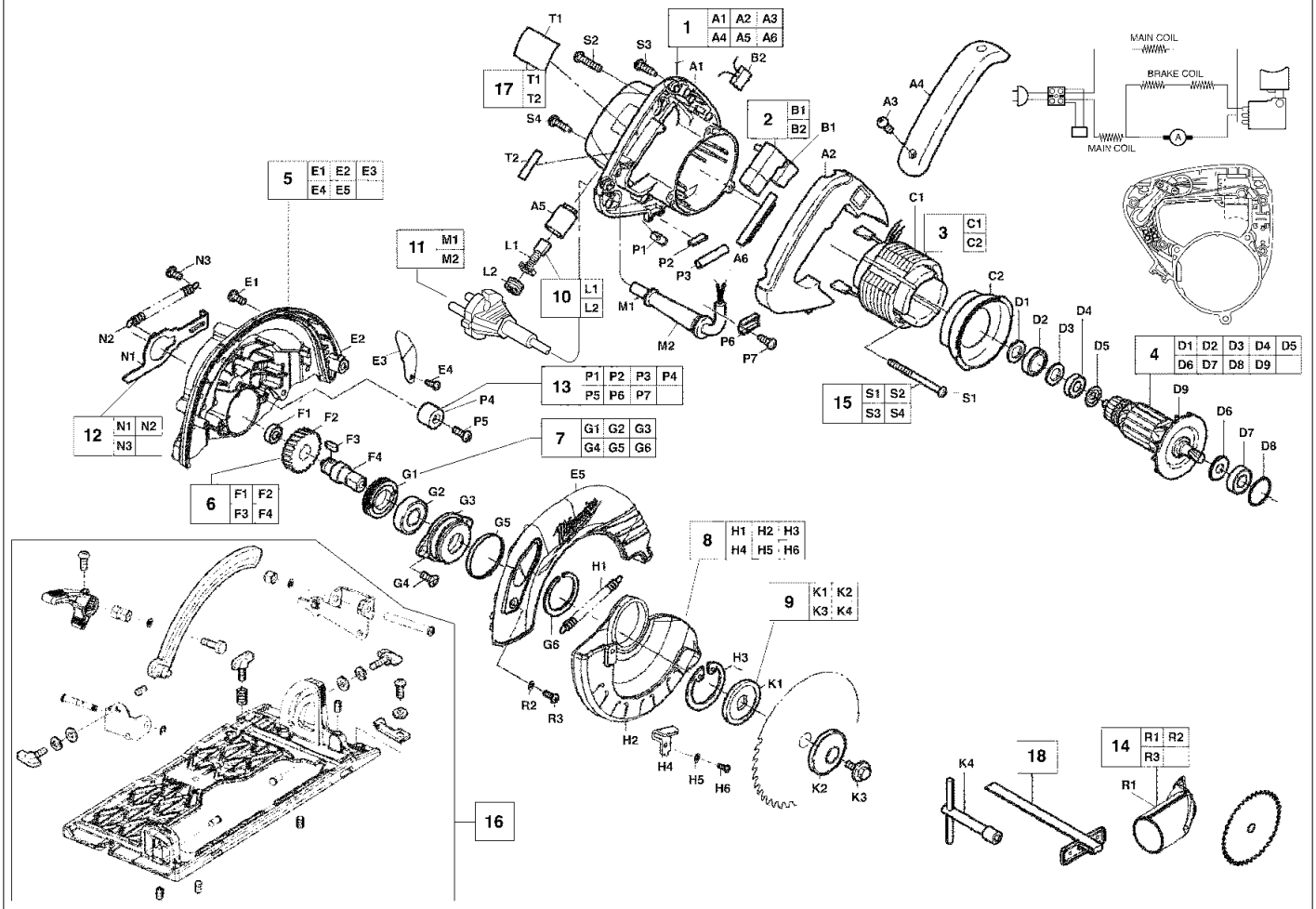

Pos	Index	Quanti	Article No.	Designation
0001	a.....	1	4931403696	MOTOR HOUSING
0002	a.....	1	4931403697	SWITCH
0003	a.....	1	4931403698	ELECTRIC FIELD
0004	a.....	1	4931403699	ARMATURE
0005	a.....	1	4931403700	GEAR UNIT
0006	a.....	1	4931403701	GEAR UNIT
0007	a.....	1	4931403702	GEAR UNIT
0008	a.....	1	4931403703	COVER ASSY
0009	a.....	1	4931403704	FLANGE
0010	a.....	1	4931403705	CARBON BRUSH SET
0011	a.....	1	4931403706	CONNECTION CABLE
0012	a.....	1	4931403707	SPINDLE LOCK
0013	a.....	1	4931403708	SCREWDRIVER
0014	a.....	1	4931403709	NOZZLE
0015	a.....	1	4931403710	SCREWDRIVER
0016	a.....	1	4931403711	BASE PLATE
0017	a.....	1	4931403712	RATING PLATE
0018	a.....	1	4931403693	SLEEVE GUIDE

Pos	Index	Quanti	Article No.	Designation

Repairs/modification and and testing of electric power tools are to be carried out by specialists. The safety regulations according to DIN/VDE/CEE/AFNOR and other regulations valid in the different countries are to be observed.